TECO	OUTLINE DIMENSIONS	MOTOR TYPE: AEUH8P-XXX
DATE	3-PHASE INDUCTION MOTOR	FRAME NO. 184TC

Pole	HP	kW	Hz	VOLT	r/min
2	5	3.73	60	230/460	3600

Ins	Rating	Dimension in	Approx Weight	Bearings
F	CONT.	inches		DE: 6306ZZ NDE: 6306ZZ

Totally Enclosed Fan-Cooled Vertical Type. Squirrel-Cage Rotor.

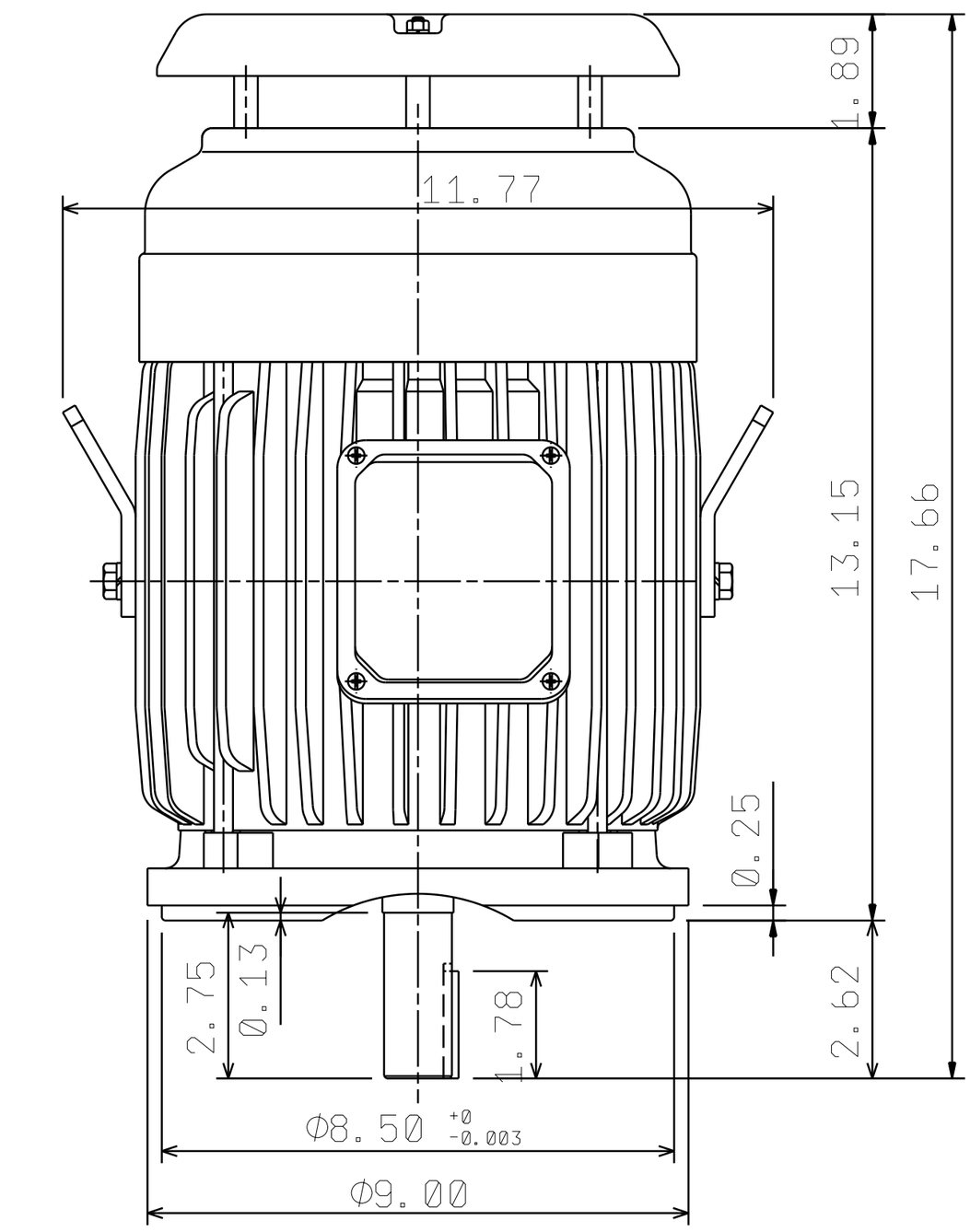

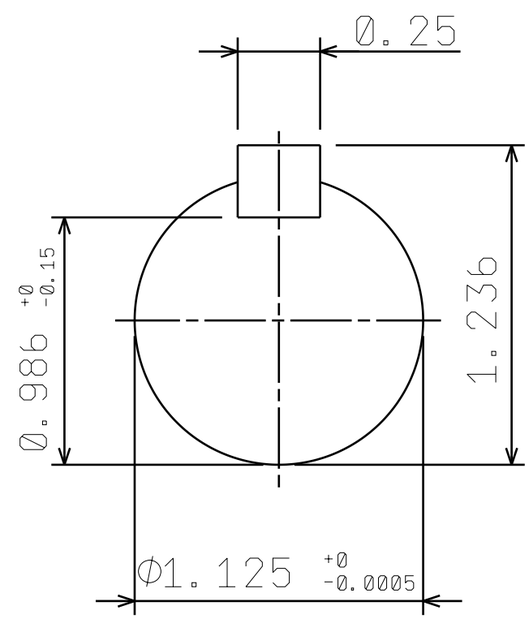

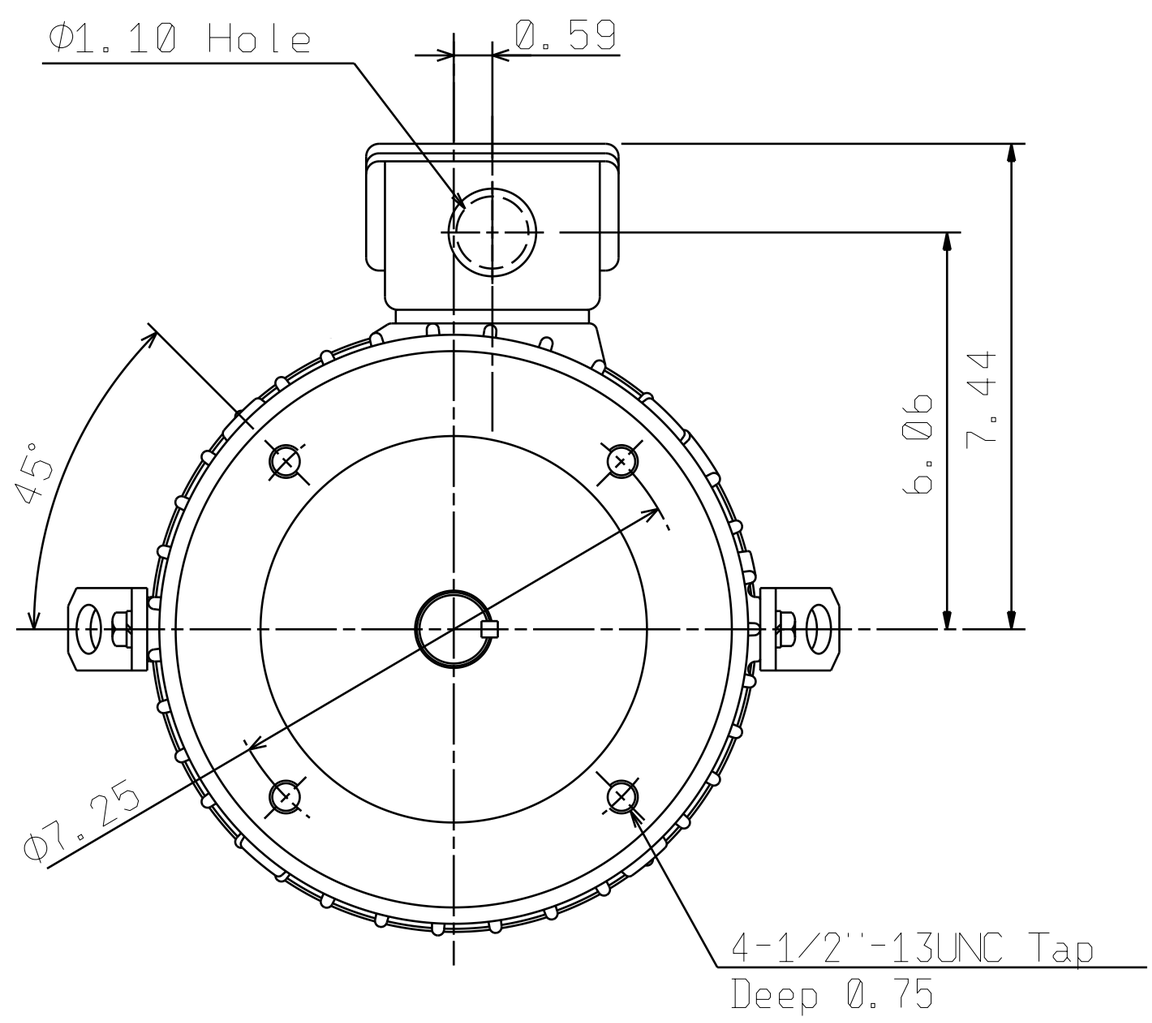

TA17142-00-01

0	.		^B%iD	

DWG.	^B%S	04-12-17	東元電機股份有限公司 TECO Electric & Machinery Co., Ltd. TAIWAN
CHKD.	^B%R	04-12-17	
APPD.	^B%R	04-12-17	

DWG NO. 31057A210500